# SAFELOAD™

BUILT AFRICA TOUGH

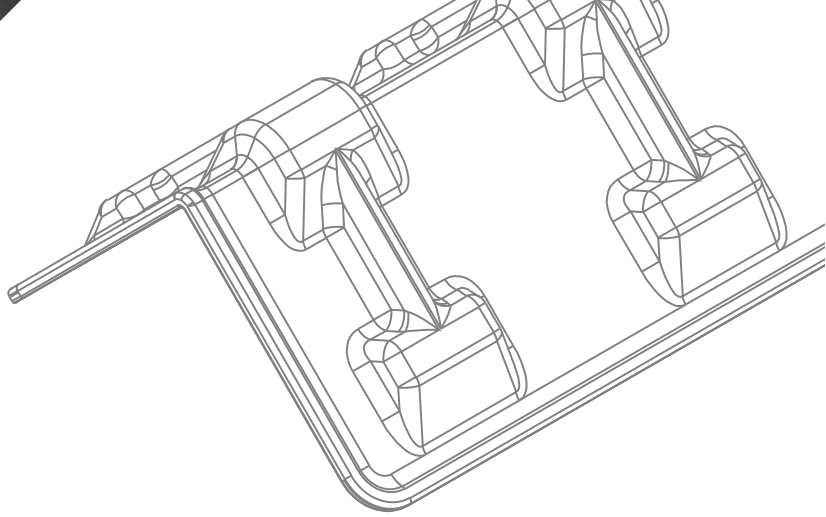

# WHY US

**As a global market leader in the development of high-quality safety products, we value and recognise changing needs and are constantly innovating, designing and manufacturing new products for the trucking and industrial sectors as well as the DIY enthusiasts, hobbyists, adventurists & tradesmen. Always with safety in mind.**

**As a brand of PIMMS Group, and having offices in the USA, Canada, UK and South Africa, we have access to leading industrial designers, engineers, tooling specialists and injection moulders. This ensures that the highest quality standards are always met and our innovative products always improve the lives of people.**

**Founded in South Africa in 2001, we partner with distributors globally to reach the world. People love our products because not only are they reliable, they are "Built Africa Tough"!**

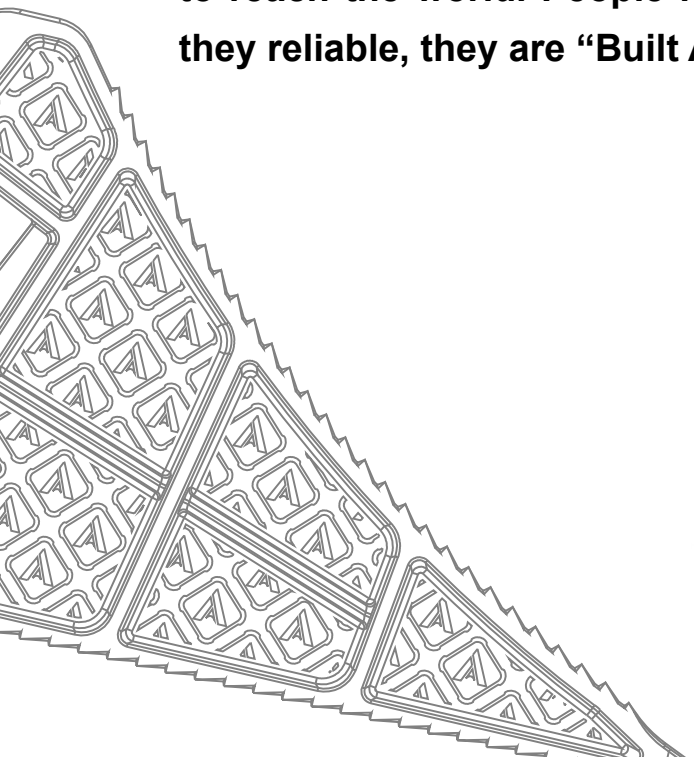

ISO 9001:2015

PIMMS GROUP PLASTIC PRODUCT SPECIALISTS

# CORNER PROTECTORS

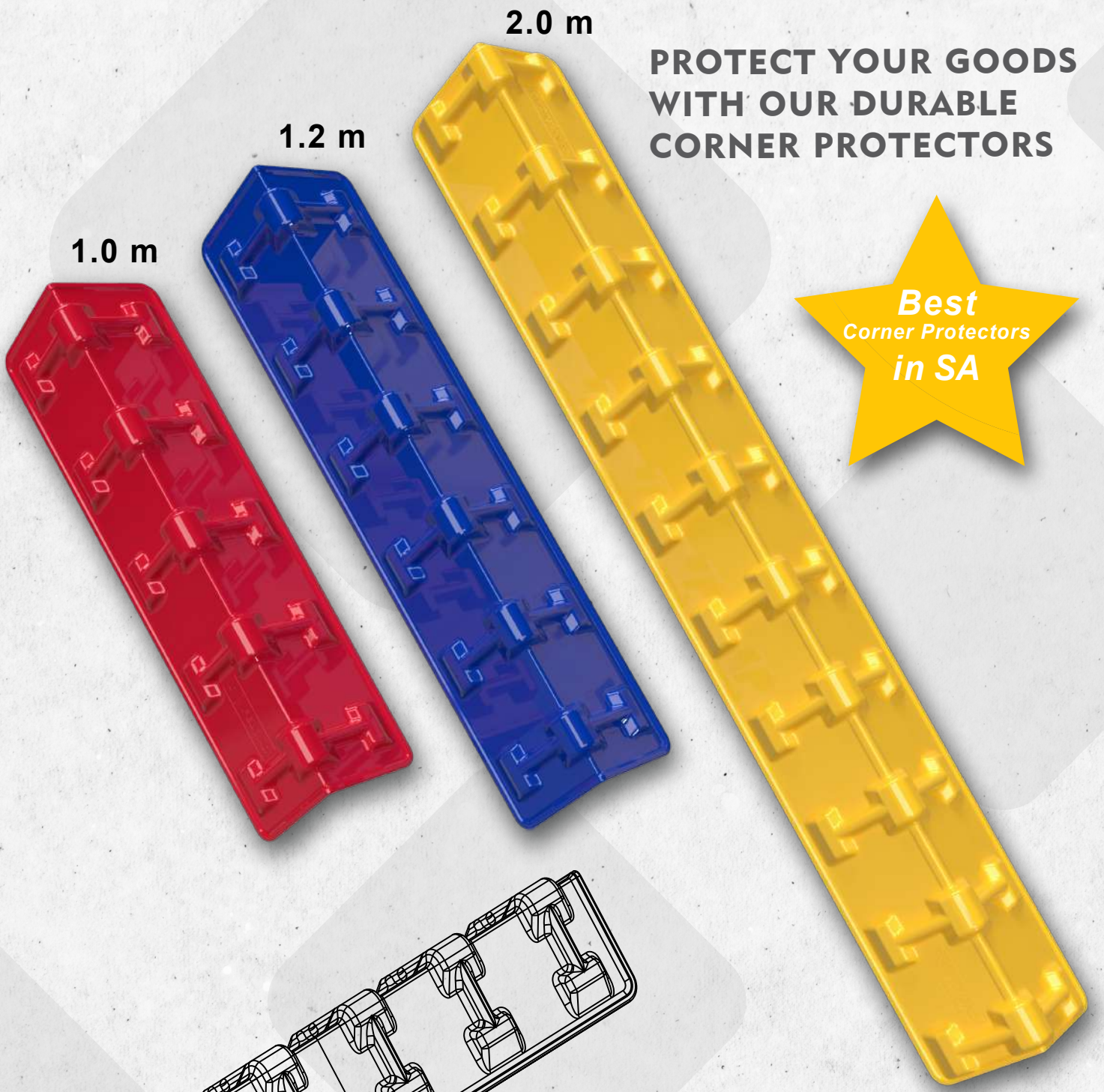


## PROTECT YOUR GOODS WITH OUR DURABLE CORNER PROTECTORS

**Best**
*Corner Protectors*
**in SA**

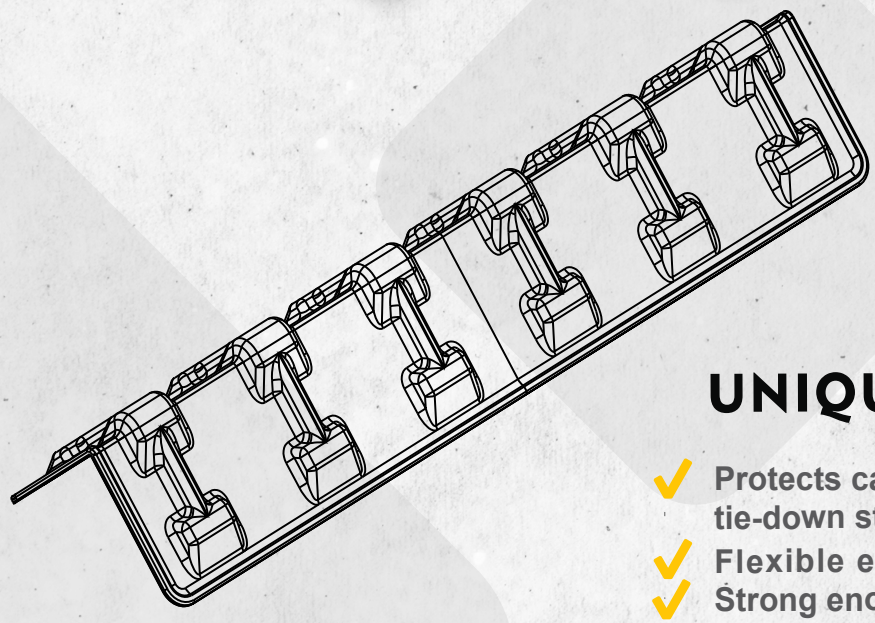

## UNIQUE FEATURES

- ✓ Protects cargo by spreading the load of the tie-down strap
- ✓ Flexible enough to conform to different loads
- ✓ Strong enough to bend, not break

SAFELOAD™

# IT'S MORE THAN TOUGH

## SPECIFICATIONS

| | |
|---|---|
| 100 mm | 0.10 kg |
| 300 mm | 0.75 kg |
| 600 mm | 1.2 kg |
| 1 m | 2 kg |
| 1.2 m | 2.2 kg |
| 2 m | 3.5 kg |
| Material | Polypropylene |
| Standard Colours | Yellow, Blue, Green, Red & Black<br><br>Other Colours on pre-order |

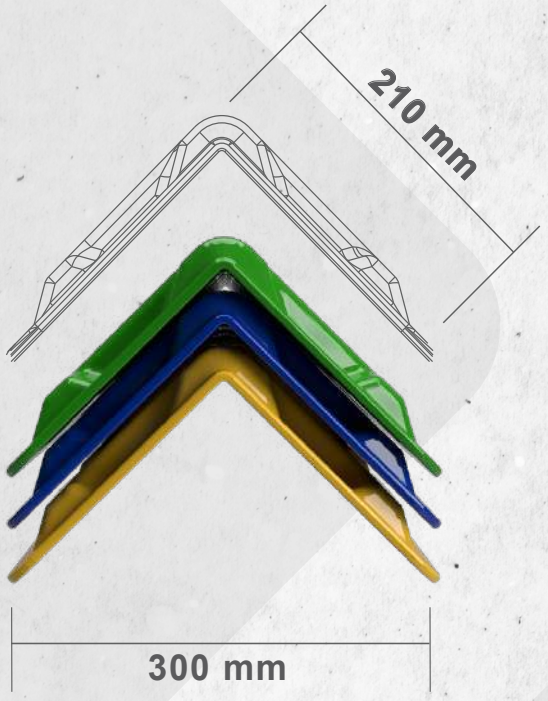


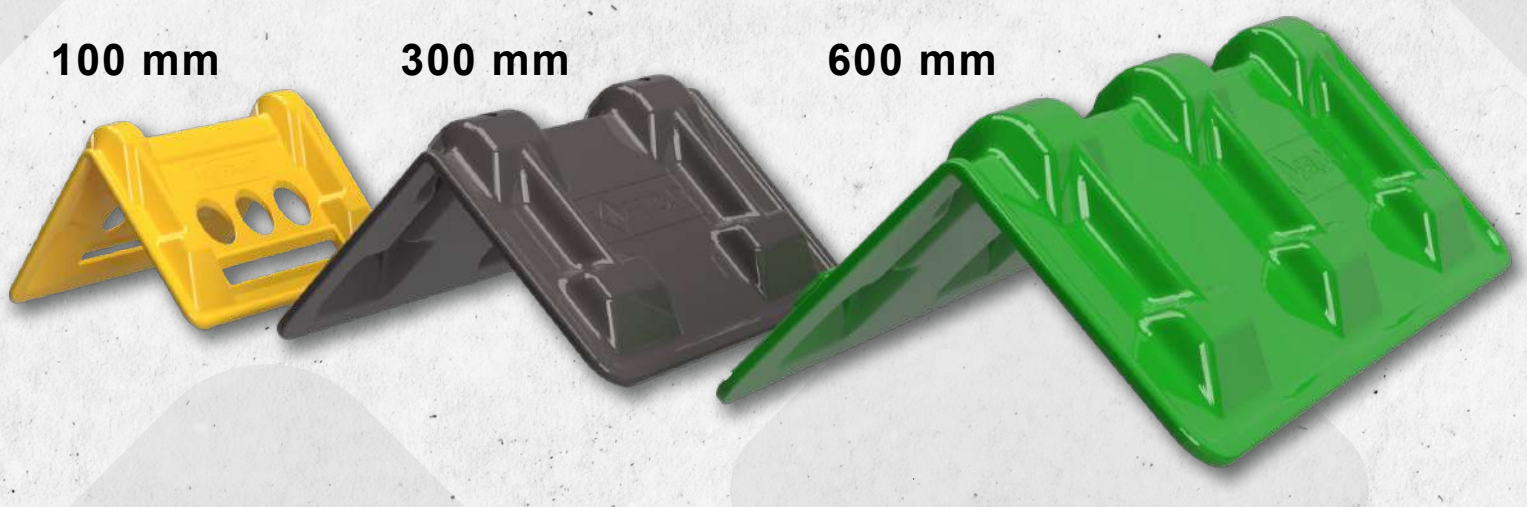


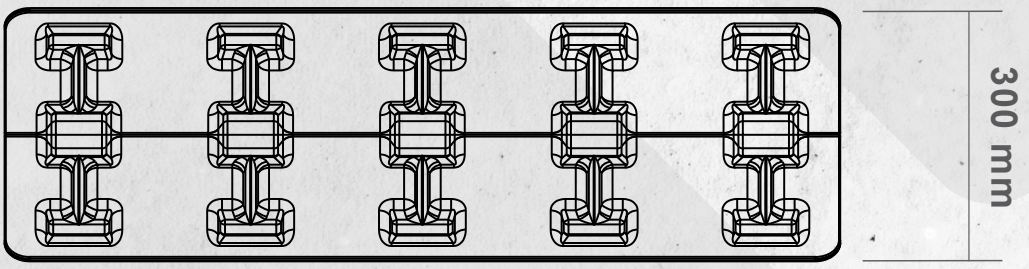


## SIZES

2.0 m
1.2 m
1.0 m
600 mm
300 mm
100 mm

SAFELOAD™

# RATCHETS & STRAPS

## SPECIFICATIONS

| | |
|---|---|
| Sizes | Ratchet with 50 mm x 9 m strap & J-Hook (5 ton)<br><br>Ratchet with 50 mm x 6 m strap & J-Hook (2 ton) |
| Colour | Standard - Yellow<br><br>Other colours on pre-order |

QUICK RELEASE MECHANISM



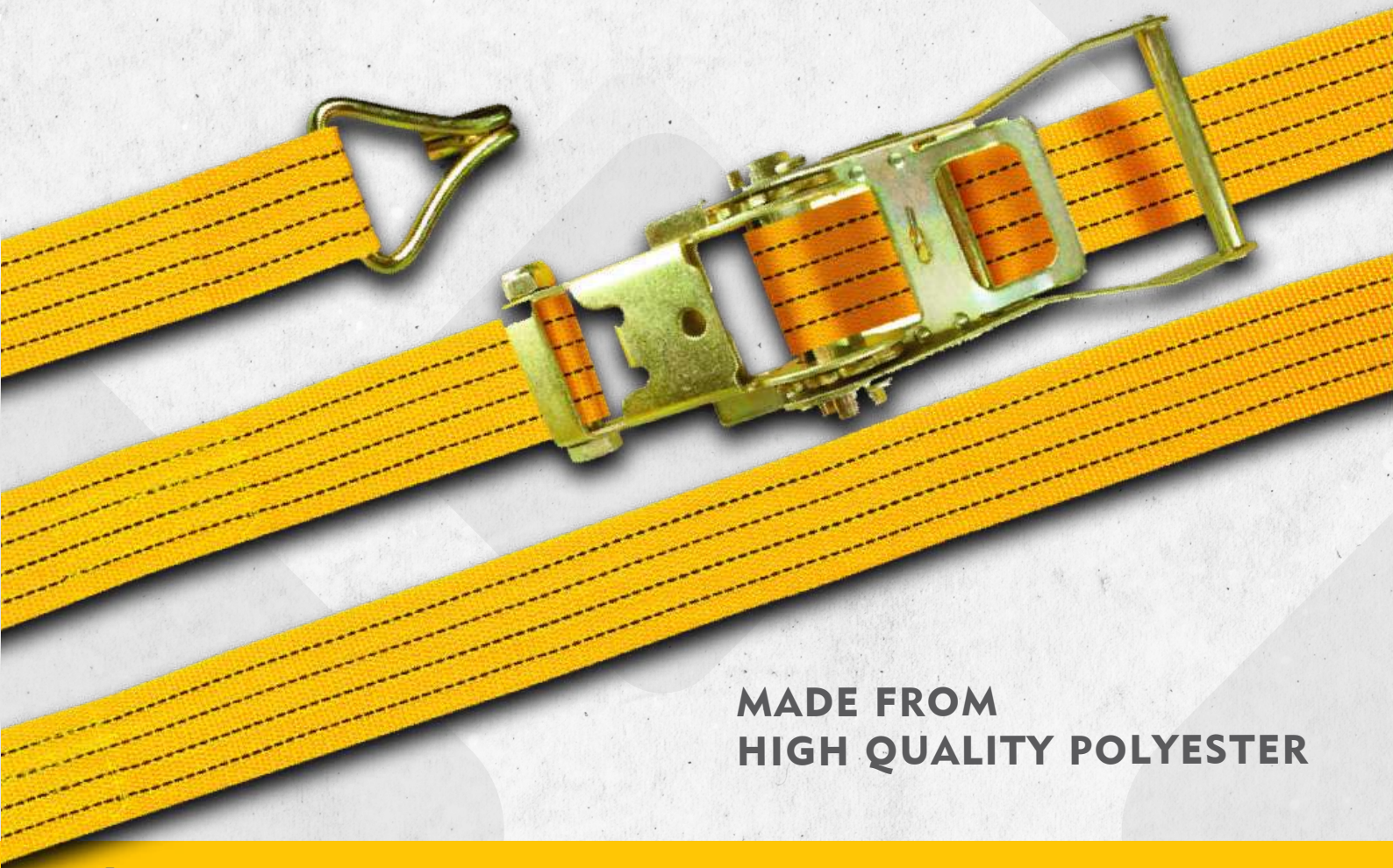

MADE FROM HIGH QUALITY POLYESTER

SAFELOAD™

# MIGHTY CHOCKS




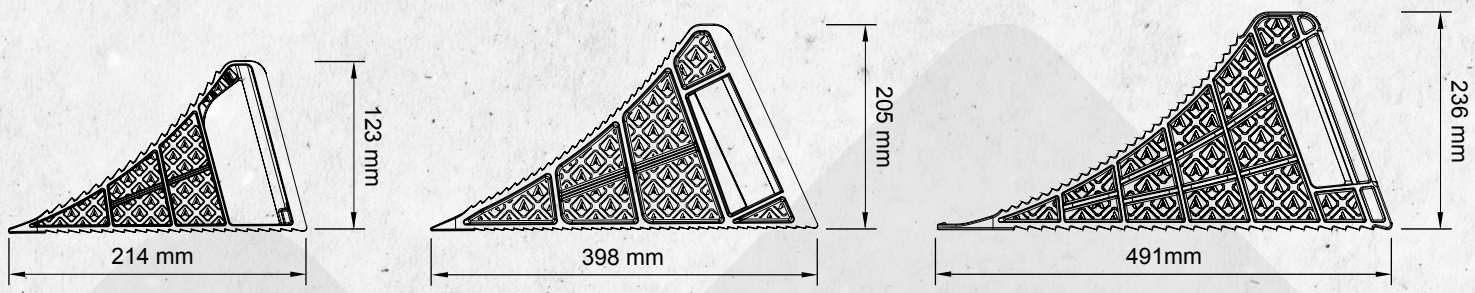


## UNIQUE FEATURES

- ✓ Sold in pairs for loads of up to 5 ton, 20 ton & 40 ton
- ✓ Serrated edges for maximum grip
- ✓ Easy grip handle for effortless handling
- ✓ Optimal structure for weight bearing capability, yet lightweight

SAFELOAD™

## SPECIFICATIONS

| | |
|---|---|
| 5 ton | 0.3 kg |
| 20 ton | 1.2 kg |
| 40 ton | 1.7 kg |
| Material | Polypropylene |
| Colour | Yellow |



## OPTIONAL CARRIER AVAILABLE



## ADDED SECURITY TO PREVENT TRUCKS & TRAILERS FROM ROLLING



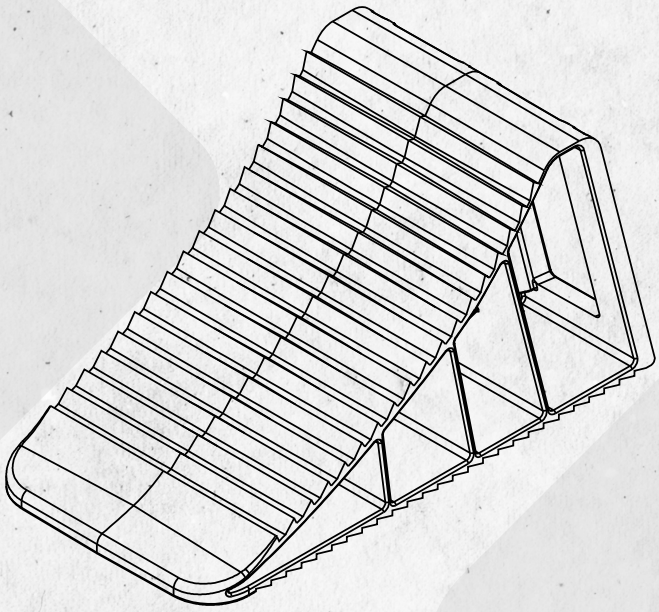

SAFELOAD™

# WHEEL NUT INDICATORS

## OPEN CAPS

### SIZES

17 mm - 57 mm



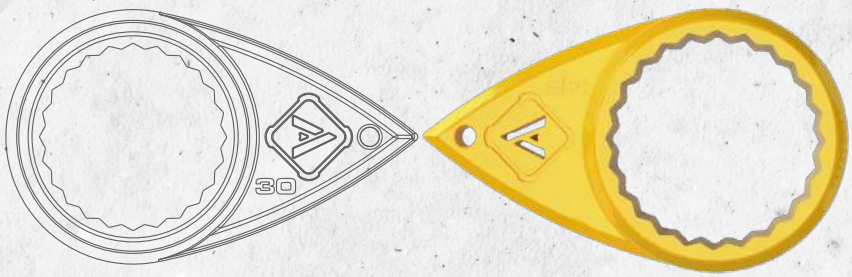

## DUST CAPS

### SIZES

17 mm - 41 mm





## SPECIFICATIONS

| | |
|---|---|
| Open Caps | 17 mm - 57 mm |
| Dust Caps | 17 mm - 41 mm<br>(Actual product may vary) |
| Colours | Standard - Yellow<br>Other colours on pre-order |

## UNIQUE FEATURES

- ✓ Time saver for driver
- ✓ Visual indicator
- ✓ Safety requirement for entry into mines

SAFELOAD™

# DURATOUGH BOX 120L



## IDEAL LOCKABLE BOX TO STORE & TRANSPORT THE THINGS THAT MATTER

## UNIQUE FEATURES

- ✓ Rain/water resistant
- ✓ Strong & durable
- ✓ Mountable for walls & vehicles
- ✓ Secure compression latches
- ✓ Lockable heavy-duty latches
- ✓ Ergonomic pull handle
- ✓ Wheels for easy maneuverability



SAFELOAD™

# OPTIONAL MOUNTING CONFIGURATIONS

## (PURCHASED SEPARATELY)

### PERMANENT SYSTEM



### REMOVABLE SYSTEM



## SPECIFICATIONS

| | |
|---|---|
| Weight | 11 kg (without content) |
| Volume | 120 L |
| Material | Polypropylene |
| Colour | Black |

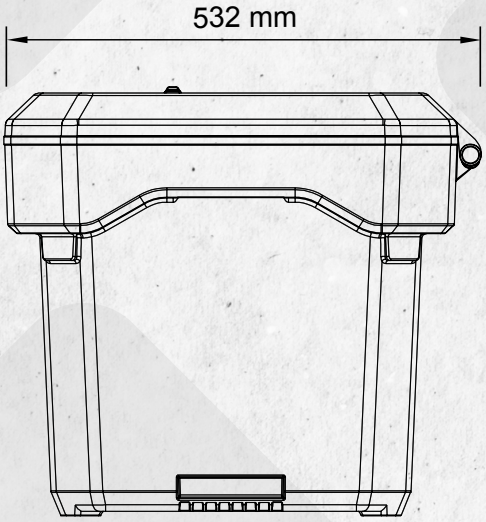


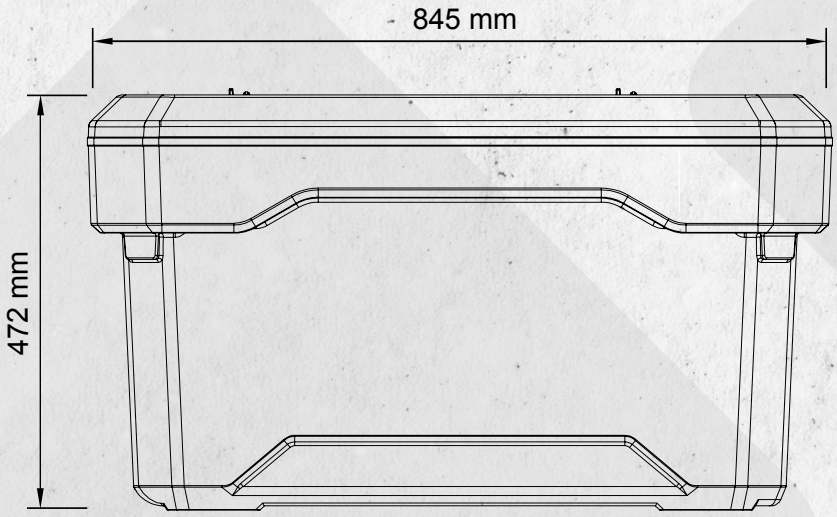

# DURATOUGH BOX 150L



## SPECIFICATIONS

| | |
|---|---|
| Weight | +/-9.6kg (without content) |
| Volume | 150 L |
| Material | Polypropylene |
| Colour | Black |



SAFELOAD™

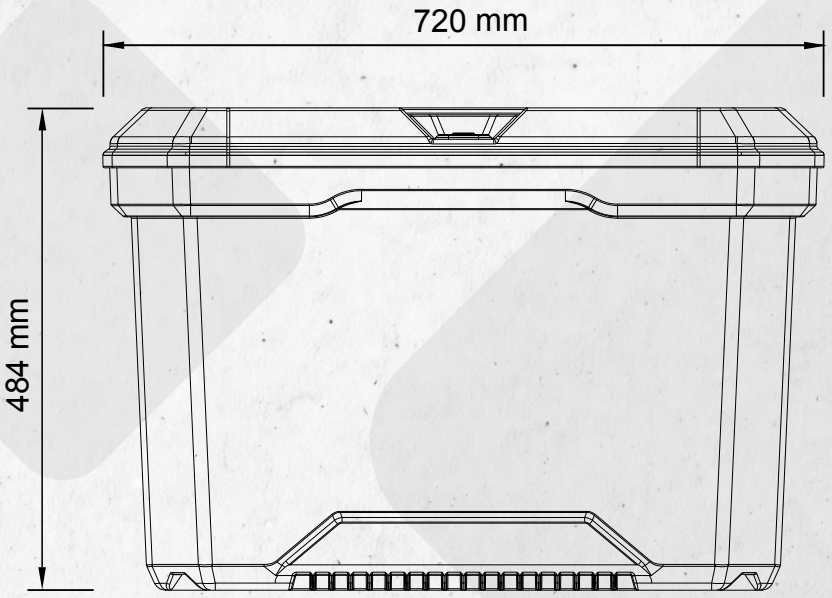


## IDEAL LOCKABLE BOX TO STORE & TRANSPORT THE THINGS THAT MATTER

## UNIQUE FEATURES

- ✓ Rain/water resistant
- ✓ Strong & durable
- ✓ Mountable for walls & vehicles
- ✓ Secure compression latches
- ✓ Lockable heavy-duty latches

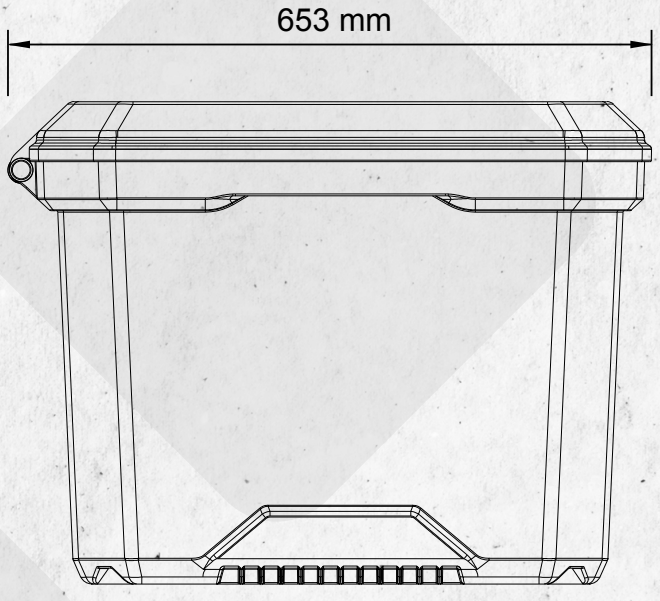


SAFELOAD™

# MAXI PRO 700 TOOLBOX



## UNIQUE FEATURES

- Durable & heavy duty
- Removable handy organiser tray
- Deep enough to store power tools
- Robust lid clips
- Padlock tab for locking

## MADE TOUGH TO HANDLE ALL TYPES OF EQUIPMENT

## LARGE ENOUGH TO STORE PLENTY TOOLS & GEAR

## SPECIFICATIONS

| | |
|---|---|
| Box weight | 4 kg (without content) |
| Volume | 32 L |
| Material | Polypropylene |
| Content use | For DIY & heavy-duty tools |
| Colour | Various |

## AVAILABLE COLOURS



SAFELOAD™



## ORGANISER TRAY INCLUDED



## CLEAR REPLACEMENT FLAPS

✓ Replacement flaps sold separately

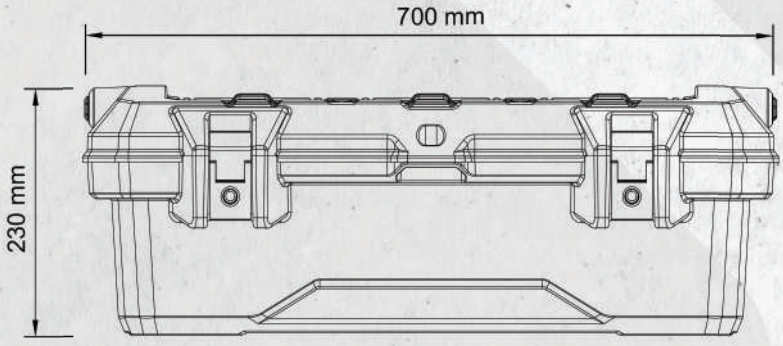


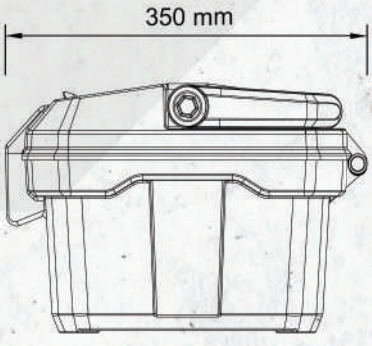


SAFELOAD™

# MAXI PRO 500 TOOLBOX WITH ORGANISER TRAY





## SPECIFICATIONS

| | |
|---|---|
| Box weight | 3 kg (without content) |
| Volume | 25 L |
| Material | Polypropylene |
| Colour | Various |

## UNIQUE FEATURES (TOOLBOX)

- ✓ Deep for power tools
- ✓ Removable tray with handle
- ✓ Padlock tab

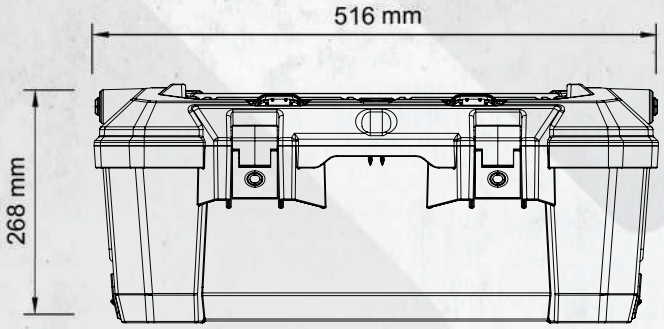


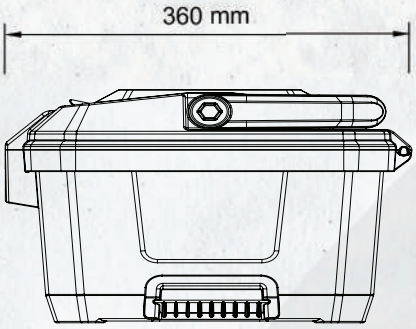


SAFELOAD™



# ORGANISER TRAY
# UNIQUE FEATURES

- Stackable
- Clips onto toolbox
- Arrange dividers to fit your needs

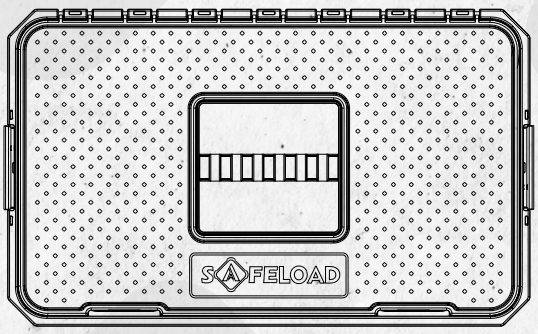




SAFELOAD™

# ACCESSORIES



## ADDITIONAL & STACKABLE ORGANISER TRAYS

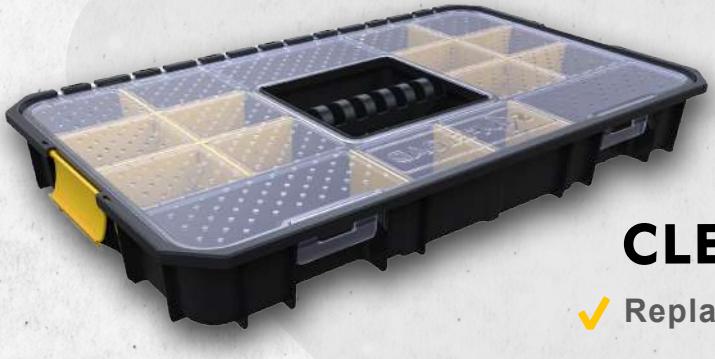

## CLEAR REPLACEMENT FLAPS

✓ Replacement flaps sold separately



## DIVIDERS

✓ Spare dividers sold separately

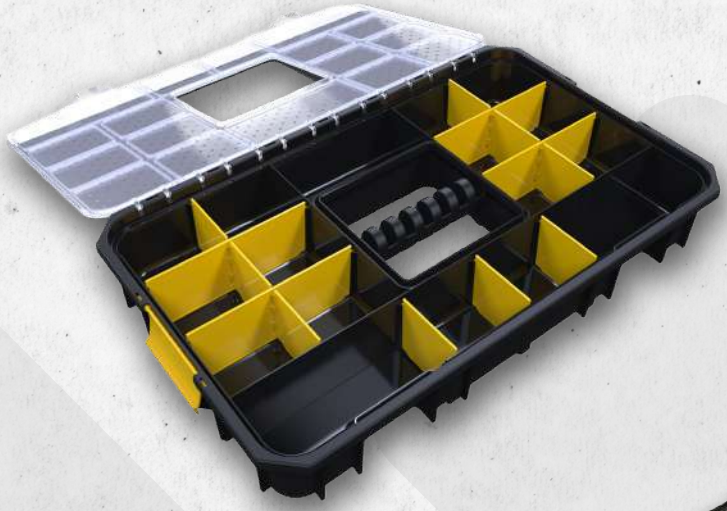




## WHITEBOARD

✓ Whiteboard sold separately

SAFELOAD™

# STORAGE BINS & MOUNTING PANELS



## SPECIFICATIONS

| | |
|---|---|
| BIN 2: | 135mm x 105mm x 75mm |
| BIN 3: | 190mm x 105mm x 75mm |
| BIN 4: | 210mm x 140mm x 130mm |
| BIN 5: | 280mm x 140mm x 130mm |
| BIN 6: | 280mm x 210mm x 180mm |
| BIN 7: | 375mm x 210mm x 180mm |
| BIN 8: | 375mm x 420mm x 180mm |
| Colours: | Black, Blue, Clear, Green, Grey, Red & Yellow |
| Meterial: | PRP1042 Polypropylene co-polymers |

## UNIQUE FEATURES

- ✓ Ideal space saving solution
- ✓ Bins are stackable
- ✓ Dividers are available for each size
- ✓ Bins can be mounted onto panels
- ✓ 7 sizes available

**OFFERING TAILORED STORAGE SOLUTIONS. EASILY MOUNTABLE ON THE WALL AND FEATURING DIVIDERS FOR FURTHER CUSTOMIZATION.**



SAFELOAD™

# WALL MOUNTED STEEL PANELS

## (PANELS SOLD SEPARATELY)

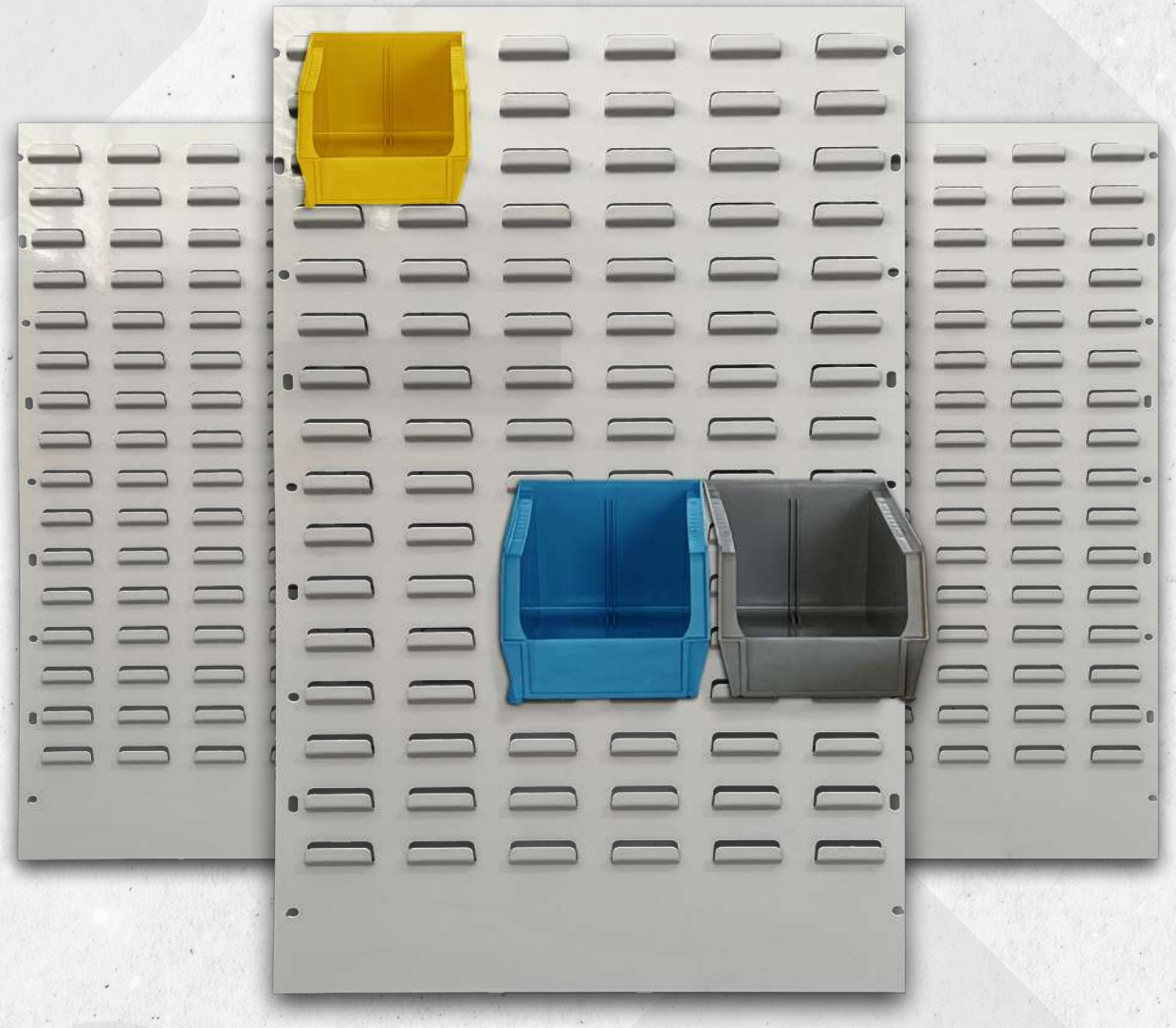

## UNIQUE FEATURES

- ✓ Ideal for organizing hand tools
- ✓ Varying bin sizes can be mounted
- ✓ Powder coated steel
- ✓ 5 sizes available
- ✓ Highly resistant to rust

## SPECIFICATIONS

| | |
|---|---|
| SBPANEL0432: | (H)432mm x (W)457mm |
| SBPANEL0914: | (H)914mm x (W)457mm |
| SBPANEL1219: | (H)1219mm x (W)457mm |
| SBPANEL1524: | (H)1524mm x (W)457mm |
| SBPANEL1828: | (H)1828mm x (W)457mm |

SAFELOAD™

# FIRE EXTINGUISHER BOXES

R&B



R&C



## UNIQUE FEATURES:

- ✓ Non corrosive and weather resistant
- ✓ Padlock/Security seal tab
- ✓ Inspection window
- ✓ Strong enough to mount on the vehicle with a 9kg bottle

R&R



## SPECIFICATIONS

| | |
|---|---|
| Box weight | 4 kg (without content) |
| Volume | 32 L |
| Material | Polypropylene |
| Colour | R&B, R&C, R&R |

**EXCLUDES FIRE EXTINGUISHER**

SAFELOAD™

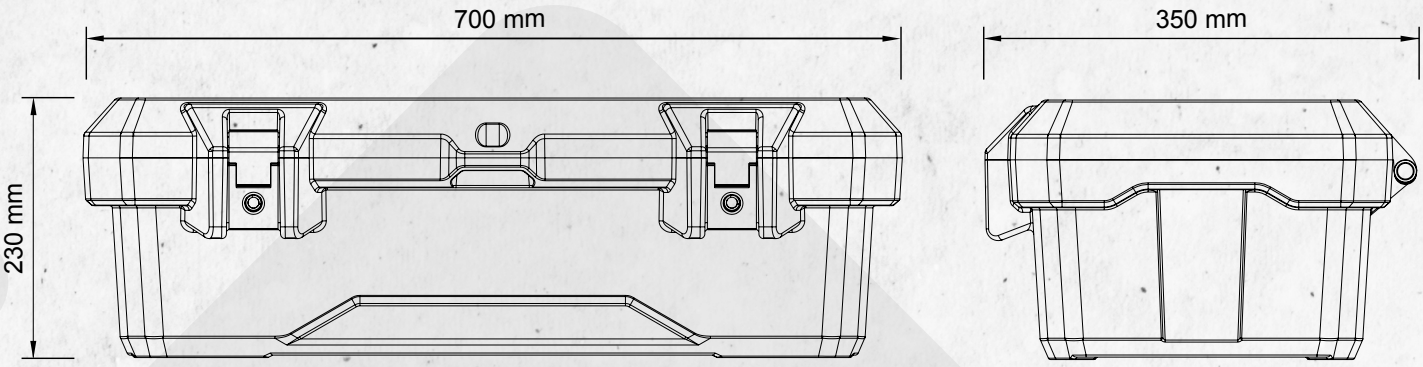




## QUICK ACCESS & SAFE STORAGE





## OPEN CRADLE FIRE BRACKET

## UNIQUE FEATURES:

- ✓ Quick access and easy to use
- ✓ Quick release and durable securing straps
- ✓ Wall or vehicle mountable

SAFELOAD™

# MEDICAL BOXES

## WALL MOUNTED MEDICAL BOX WITH REMOVABLE INNER BACKPACK





## WALL MOUNTED MEDICAL BOX (BOX ONLY)



## SPECIFICATIONS

| | |
|---|---|
| Box weight | 4 kg (without content) |
| Volume | 32 L |
| Material | Polypropylene |
| Colour | Green base with clear lid or white lid |

## UNIQUE FEATURES:

- ✓ Durable
- ✓ weather resistant (UV resistant)
- ✓ Padlock tab
- ✓ Wall or vehicle mountable

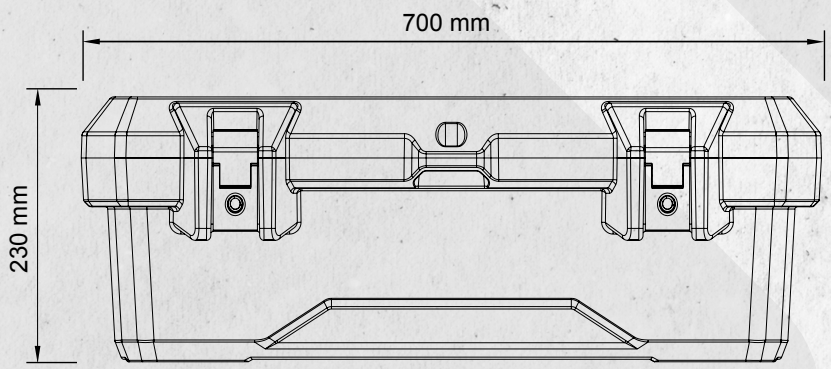


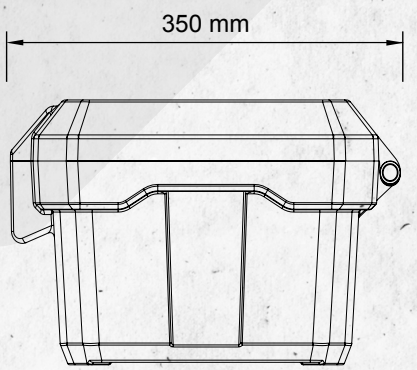


SAFELOAD™

# F16 DUST MASK

## IDEAL FOR PROVIDING PROTECTION FROM DUST & TOXIC AIRBORNE HAZARDS



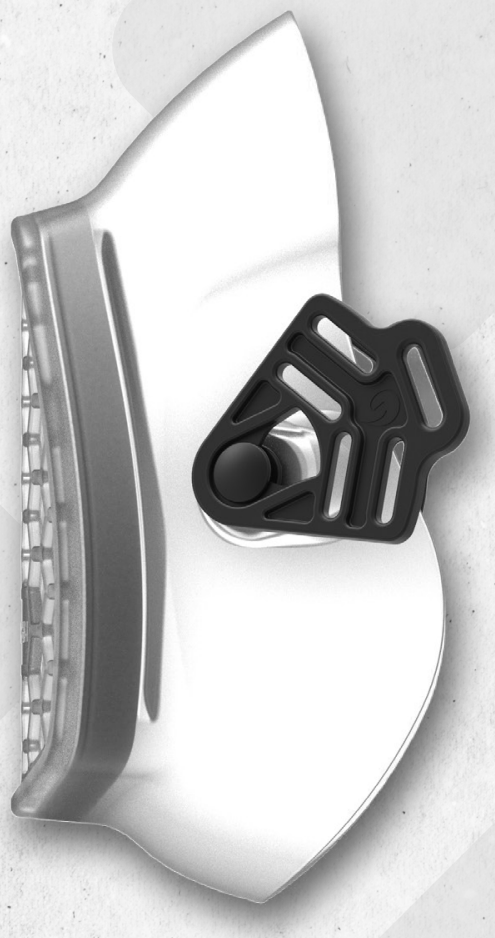

## UNIQUE FEATURES

- ✓ 100% Reusable
- ✓ Replaceable filter
- ✓ Ergonomically designed
- ✓ Available in sizes Medium & Large

## SPECIFICATIONS

| | |
|---|---|
| Material | Soft material |
| Filter info | ISO 14644-1:2015 certified |

SAFELOAD™

# STEAM STERILIZATION CONTAINER

- ✓ Polypropylene container to sterilize the mask
- ✓ Suitable for microwaving



## COLOUR OPTIONS

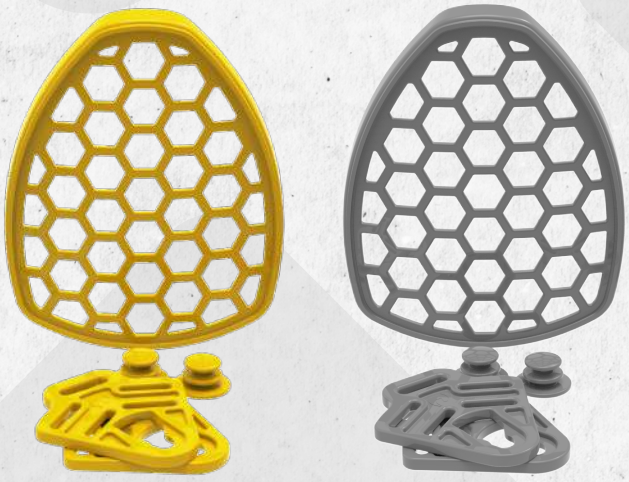

## 3 DIFFERENT STRAP WEAR CONFIGURATIONS



SAFELOAD™

# HAND DISPENSER



PUSH



DISPENSE



CLEAN



## SANITISER REFILLS AVAILABLE

## SPECIFICATIONS

| | |
|---|---|
| Material | ABS |

## UNIQUE FEATURES

- ✓ 700 ml Refillable bottle
- ✓ Easy push mechanism
- ✓ Easy to mount design

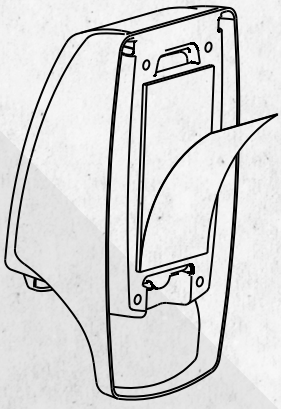

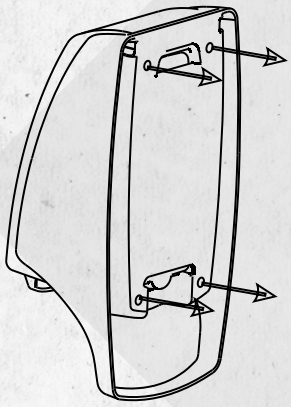



## DOUBLE SIDED TAPE & SCREW MOUNTING OPTIONS

SAFELOAD™

# CARABINER




## UNIQUE FEATURES

- ✓ Easy to clip to belt and/or to hold your keys
- ✓ Built in mini-ruler
- ✓ Built in sharp edge to open boxes/sellotape
- ✓ 2x opening feet to place your phone
- ✓ 5kg carrying capacity

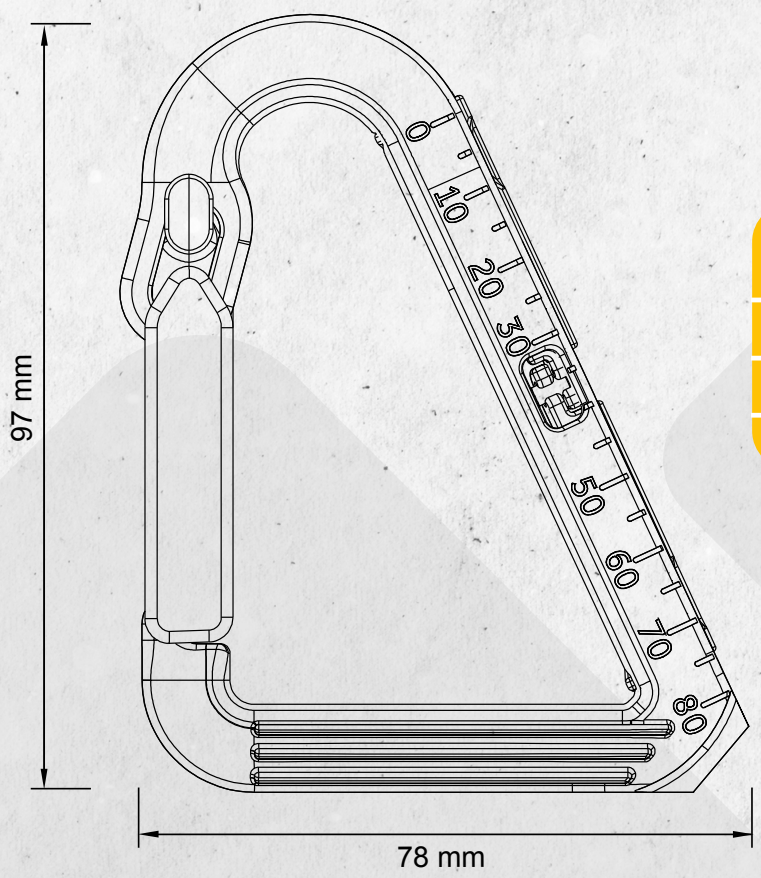


## SPECIFICATIONS

| | |
|---|---|
| Size | 97 mm x 78 mm) |
| Material | Acetal |
| Colour | Yellow & Black |

SAFELOAD™

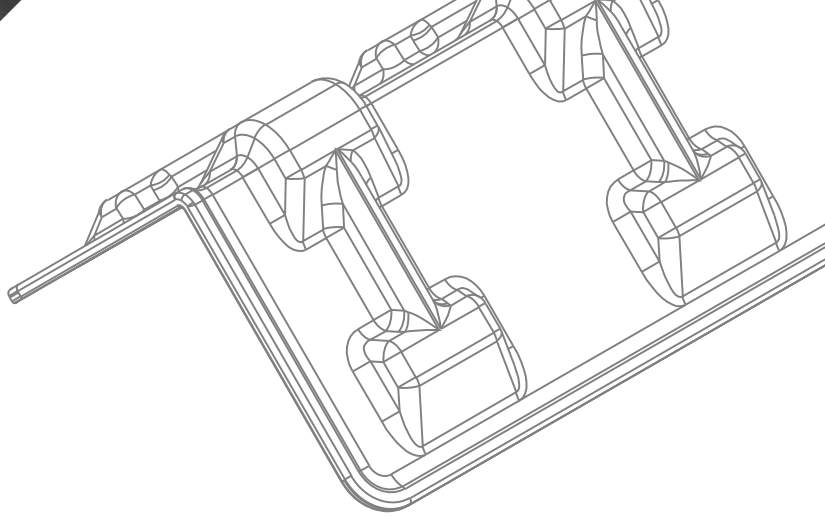

# LET'S CONNECT


**T:** +2711 7084755

**E:** sales@safeload.co.za

**A:** 1050 Liner Ave, Corner Zeiss Road, Laser Park, Honeydew, Johannesburg, South Africa


**Opening hours I Mon - Thur 8:00 - 17:00 I Fri 8:00 - 15:00**

